WATER CURTAIN

The digital water curtain stands out for its uniqueness in the world of architectural fountains.

Far removed from the familiar architectural fountains found in our cities, the digital water curtain has a character all its own. It stands out for the splendour of its elements, which **combine technology, hydraulics, engineering and lighting to create a water show that will leave no one indifferent.**

The digital water curtain is a **dynamic wall of water**. It is made up of multiple vertical jets. Given its advanced configuration, **it allows us to design and colour patterns, logos, shapes or letters that are then printed on the water.**

Thanks to **the control software** developed by SafeRain and the use of fast-acting solenoid valves, we are able to draw your idea on the water.

We offer the curtain in 2m and 3m water modules with no length limit.



PRODUCTS – DIGITAL CURTAIN

- ELEMENTS
- COMPONENTS
- CONTROL SOFTWARE
- INTERACTIVE MODULES
- AVAILABLE CONFIGURATIONS
- WATER MODULES

ELEMENTS

01. WATER MODULES

Water modules, which are an external structure to which a stainless steel collector is attached. From this point, all the elements of the digital water curtain will be supported.

02. VERTICAL JETS OF WATER

Vertical jets of water are drawn through ultra-fast solenoid valves, creating a wall of water onto which the shapes, words or logos that we have previously designed with our tablet, from which we manage the operation of our digital curtain, will be printed.

03. WATER TANK

Water tank for collection and reuse. The water is pumped back to the top by a submersible pump. In this way, our digital water curtain promotes responsible water consumption.

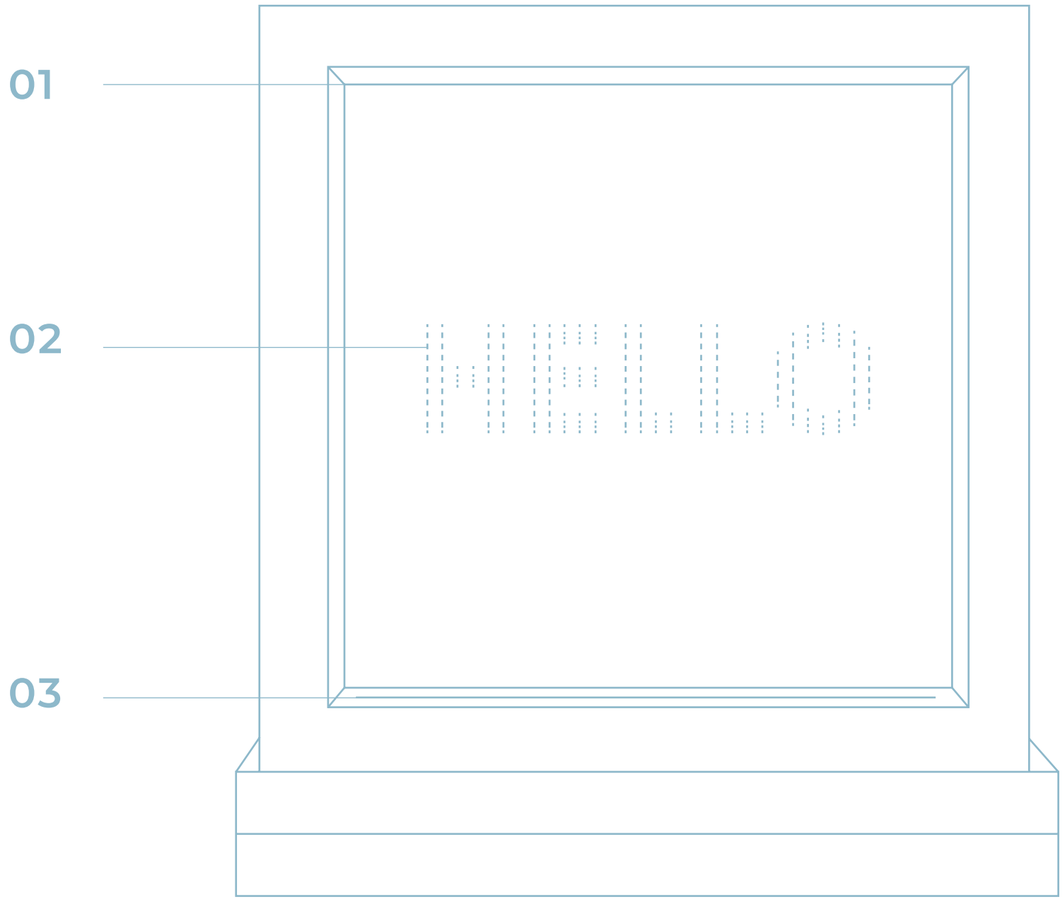

ELEMENTS

CONTROL AND INTERACTIVE SOFTWARE

For any body to function, it needs a **brain** to govern it.

Thanks to our water technology, we have designed and implemented **specific software** to control the digital water curtain.

This software consists of a **desktop version** from which to check the patterns designed before they are displayed on the water, and **execution software**, which is responsible for checking the correct installation of our curtain.

To complete the control functions, an **application for tablets** is included.

From the comfort of the app, we create designs that are immediately displayed on the water.

In addition, the system comes standard with the ability to control the digital curtain via remote control.

This feature only needs to be enabled, as it is installed as standard. Once activated, it allows you to connect to the curtain's PC from any location, simply by having a computer and an internet connection via an Ethernet cable. This feature greatly facilitates the monitoring, diagnostics, and operation of the system without the need for physical presence at the facility



Programming software and control software for PC



Interactivity with tablet





COMPONENTS

WATER CURTAIN

Water modules	
Control software	
Electrical conductors	
Lighting	
Anemometer	
Automatic filling	
Interactivity Presence and Push Buttons	
Water pump	
Water tank	
Truss gantry	
Interactivity module with tablet	
Video projection	

CAPTION

- Essential elements
- Optional elements
- Items not included

WATER MODULES
The entire system is designed in **2- and 3-metre modules**, which can be arranged in **different geometries.**

ELECTRICAL PANEL
This includes the **control and power elements** necessary to start up the installation. The power section includes all the necessary differential and circuit breaker elements, together with **the frequency converter** that controls the **water pump.**

SOFTWARE
All elements are managed using the **SafeRain control software.**

ELECTRICAL CONDUCTORS
XLR input and output **connector** for data control. Input and output connector for solenoid valves and lighting power.

LIGHTING
Lighting with **90W 4-in-1 RGBW LED spotlights with DMX control** and **1 metre length**. Electronic control modules for solenoid valves and RGBW LED spotlights.

ANEMOMETER
Measures wind intensity. Helps **reduce splashing and water loss.**

AUTOMATIC FILLING
Includes an automatic filling system through which we can **programme filling** when necessary.

INTERACTIVITY AND BUTTONS
Through a system of **buttons** or **presence sensors**, we can involve the public in the water show they are attending.

WATER PUMP
This pumps the water from the tank to the inlet of the first module, thus creating the required patterns. Suitable for **submersible or dry pumps.**

WATER TANK
Located at the bottom of the digital water curtain, it **collects the water** to pump it back to the top.

TRUSS PORTICO
In cases where there is no fixed or reinforced ceiling, a **structure** capable of **supporting the** digital water curtain **modules** must be built.

VIDEO PROJECTION
Optionally, you can use video projection to **show your customers** any type of **advertising or corporate presentation**.

CONTROL SOFTWARE

Using **proprietary software**, we control high-speed solenoid valves to **create water figures and text in the air**. At the same time, we can apply lighting to the space. Current technology allows us to bring spectacular effects to life with what makes us happy: water.

01. DESKTOP SOFTWARE

Equipped with a **simulator**, users can **check their patterns, colours,** texts, etc. before displaying them on the digital water curtain. Using external memory, they can transfer their creation to a computer.



02. RUNNING SOFTWARE

Using **this software, available on the control panel,** all the necessary **tests** will be carried out to check that the digital water curtain has been correctly installed, reading the desktop software file.





CONTROL SOFTWARE

WE SIMPLIFY THE PROGRAMMING OF YOUR SHOW

Our innovative technology incorporates **predefined water and light patterns**, designed to facilitate the programming of stunning visual shows.

The water effects available include shapes as varied as **curtain, rain, snow, zigzag, checkerboard**, among others, allowing for great creative versatility.

In addition, you can **project text and images directly onto the water**, such as the **name of your show, your company logo**, or even **the date and time in real time**, adding a personalised and dynamic touch to each presentation.

The software also integrates a wide range of **professional lighting effects**, such as **flags, colour chases, and smooth transitions (fades)**, which enrich the visual experience and synchronise perfectly with the movements of the water.

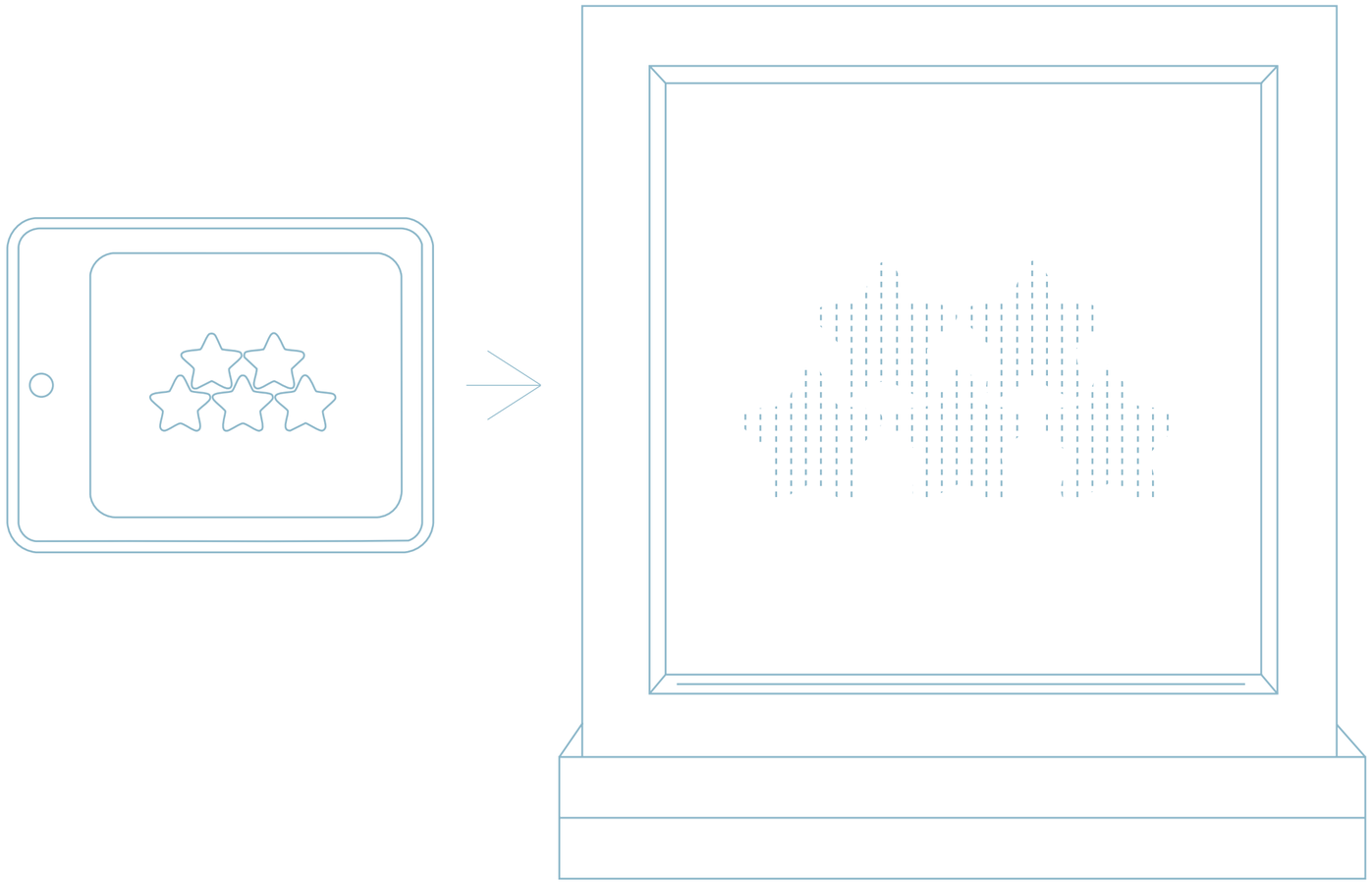

INTERACTIVE MODULES

IN-PERSON INTERACTIVITY AND INTERACTIVITY VIA BUTTONS

Our digital curtain offers **two innovative forms of interaction** that transform each experience into something unique and memorable.

The **in-person interaction module**, using strategically placed sensors, activates **surprising effects when it detects the user's presence**, creating unique and memorable moments.

On the other hand, **the push-button interaction module** offers direct control through fully configurable **physical buttons,** allowing the user **to trigger specific effects simply by pressing them.**

Two ways to connect with the audience, multiply the impact and arouse emotions.

	MAXIMUM NUMBER OF INTERACTIONS CONFIGURABLE	TYPE OF ACTUATOR	TYPE OF EFFECT TRIGGERED
PRESENCE SENSOR	1	PRESENCE DETECTOR	DOOR OPENING
PUSH BUTTONS	5	PUSH BUTTON	ACTIVATES A SPECIFIC WATER FEATURE

INTERACTIVITY VIA TABLET

With this module, **the viewer becomes the true star of the show.**

Through an **intuitive application**, they can **draw, write and apply colours** directly from a tablet, watching **their creations come to life in real time** on the digital water curtain.

This **immersive** and highly personalised **experience** not only surprises, but also generates a unique emotional connection with the audience.







AVAILABLE CONFIGURATIONS WITH PUMP

REFERENCE	F8211036	F8211047	F8211058	F8211069	F8211071	F8211082		F8211059
CURTAIN LENGTH*	3m	4m	5m	6m	7m	8m	...	15m
INFRASTRUCTURE LENGTH	4m	5m	6m	7m	8m	9m	...	16m
RECOMMENDED MAXIMUM HEIGHT	5m*							
WATER MODULES								
CONFIGURATION AND DIMENSIONS	1X3m	2X2M	(1Xm) + (1X3m)	(2X3m)	(2X2m) + (1X3m)	(2X2M) + (2X3m)	...	(6X2m) + (1X3m)
EMPTY WEIGHT (KG)	93	124	157,8	191,6	225,4	259,2	...	479
WEIGHT WITH WATER (KG)	132	176	223	270	317	364	...	675
MOUNTING BRACKETS	INCLUDED							
SOFTWARE								
DESKTOP VERSION	INCLUDED							
RUN VERSION	INCLUDED							
PREDEFINED WATER AND LIGHT PATTERNS	INCLUDED (14 EFFECTS)							
CONTROL REMOTO	INCLUDED							
CONTROL PANEL								
DIMENSIONS	600 X 400 X 2600			700 X 500 X 260			...	1000 X 800 X 260
ELECTRICAL POWER REQUIRED (INCLUDING PUMP) IN W	3900	4300	5500	7300	7600	7900	...	17500
LIGHTING								
TYPE	RGBW							
TOTAL POWER (W)	540	720	900	1080	1260	1440	...	2700
TOTAL LUMENS	** RGB: 4050lm / W: 3000lm PER METER OF CURTAIN							
ANEMOMETER								
WORKING RANGE	3 - 180 km/h							
START-UP SPEED	8 km/h							
MAXIMUM SPEED	200 km/h							
WATER PUMP								
INTEGRATED FILTERING	150 UM							

*** Custom Configurations:** Please consult your sales representative for specific requirements, such as non-standard lengths or heights greater than 5 metres | **** R**:1200LM/ **G:**2100LM/ **B:**750LM /**W:**3000LM

AVAILABLE CONFIGURTIONS WITHOUT PUMP

REFERENCE	F8212037	F8212048	F8212059	F8212061	F8212072	F8212063		F8212151
CURTAIN LENGTH*	3m	4m	5m	6m	7m	8m	...	15m
INFRASTRUCTURE LENGTH	4m	5m	6m	7m	8m	9m	...	16m
RECOMMENDED MAXIMUM HEIGHT	5m*							
WATER MODULES								
CONFIGURATION AND DIMENSIONS	1X3m	2X2M	(1Xm) + (1X3m)	(2X3m)	(2X2m) + (1X3m)	(2X2M) + (2X3m)	...	(6X2m) + (1X3m)
EMPTY WEIGHT (KG)	93	124	157,8	191,6	225,4	259,2	...	479
WEIGHT WITH WATER (KG)	132	176	223	270	317	364	...	675
MOUNTING BRACKETS	INCLUDED							
SOFTWARE								
DESKTOP VERSION	INCLUDED							
RUN VERSION	INCLUDED							
PREDEFINED WATER AND LIGHT PATTERNS	INCLUDED (14 EFFECTS)							
REMOE CONTROL	INCLUDED							
CONTROL PANEL								
DIMENSIONS	600 X 400 X 2600			700 X 500 X 260			...	1000 X 800 X 260
ELECTRICAL POWER REQUIRED (INCLUDING PUMP) IN W	3900	4300	5500	7300	7600	7900	...	17500
LIGHTING								
TYPE	RGBW							
TOTAL POWER (W)	540	720	900	1080	1260	1440	...	2700
TOTAL LUMENS	** RGB: 4050lm / W: 3000lm PER METER OF CURTAIN							
ANEMOMETER								
WORKING RANGE	3 - 180 km/h							
START-UP SPEED	8 km/h							
MAXIMUM SPEED	200 km/h							

*** Custom Configurations:** Please consult your sales representative for specific requirements, such as non-standard lengths or heights greater than 5 metres | **** R**:1200LM/ **G:**2100LM/ **B:**750LM /**W:**3000LM

WATER MODULES

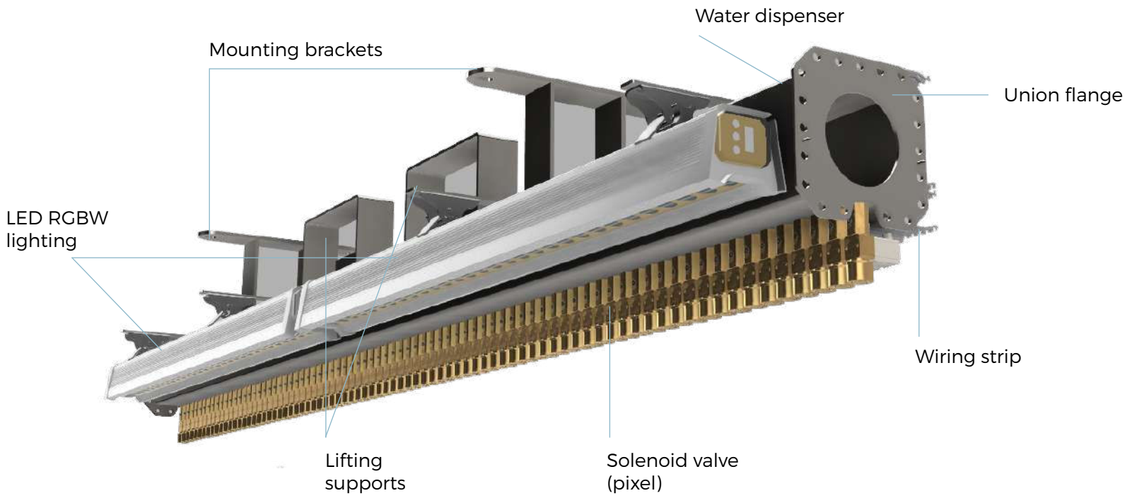

WATER MODULES		NUMBER OF OUTLETS	NUMBER OF SPOTLIGHTS	HYDRAULIC CONNECTIONS	EMPTY WEIGHT (KG.)	WEIGHT WITH WATER (KG)
2M	3M					
1	-	80	2	3"M BSP	56,4	82
-	1	120	3	3"M BSP	90,2	129

* Any curtain length can be achieved by combining these modules.

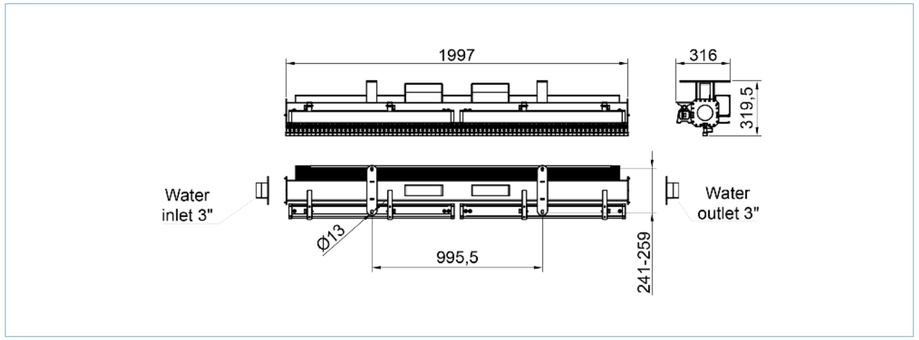

* Module length: 2 metres.

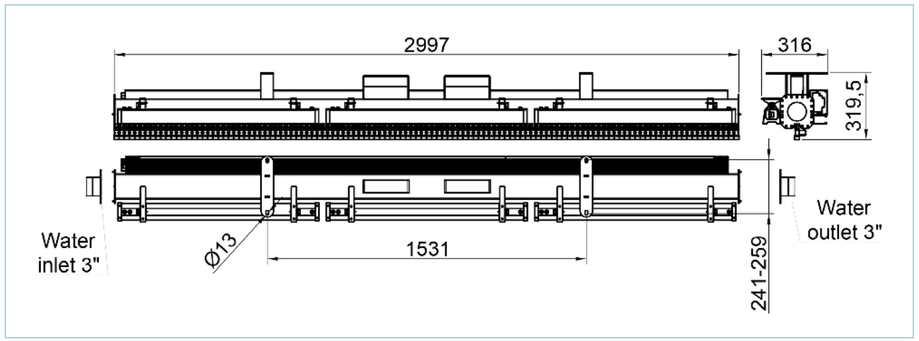

* 3 m long module.